526 WW
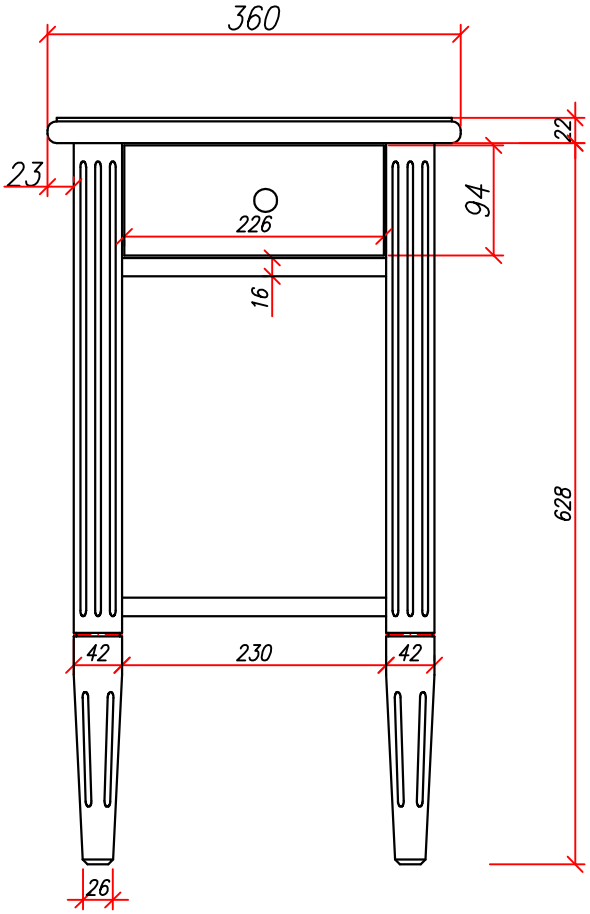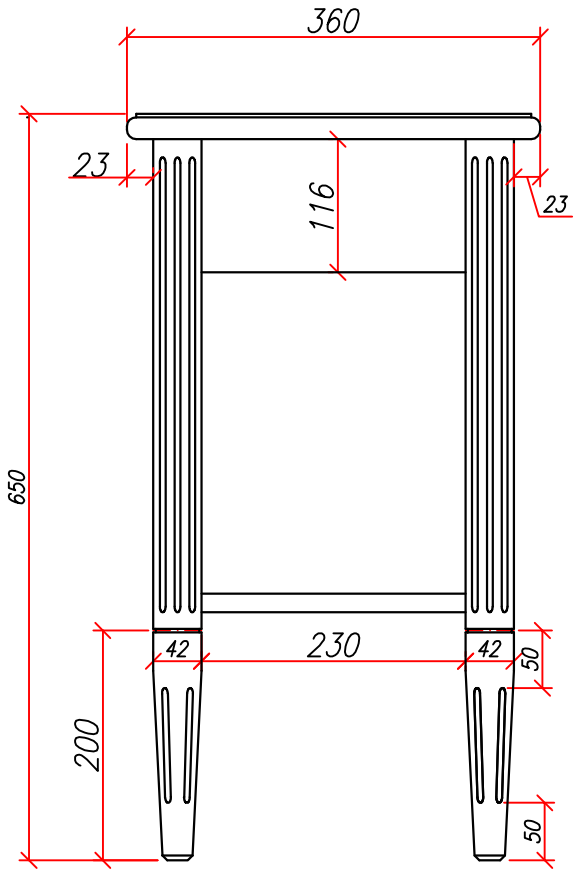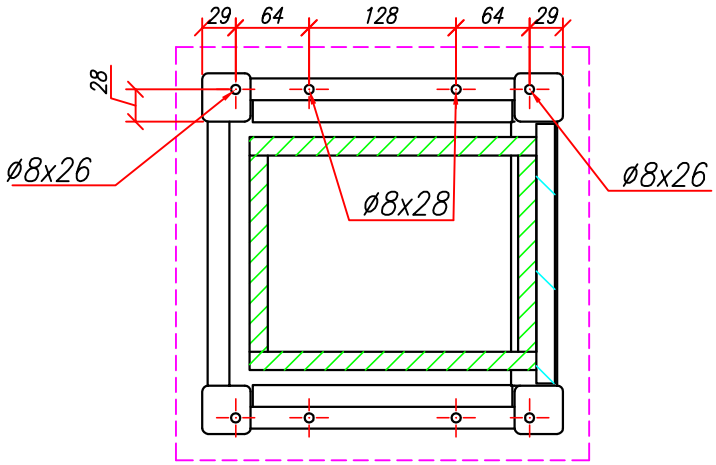
M 483913